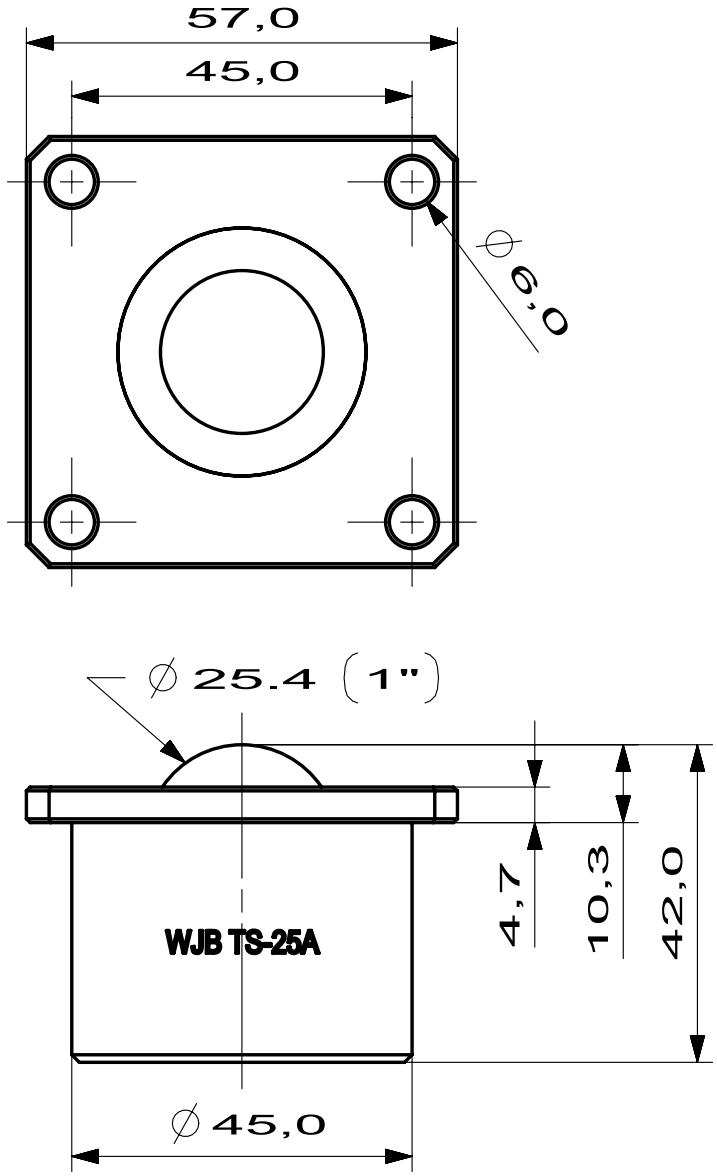
57,0
45,0
∅6,0
∅25.4 (1")
4,7
10,3
42,0
WJB TS-25A
∅45,0