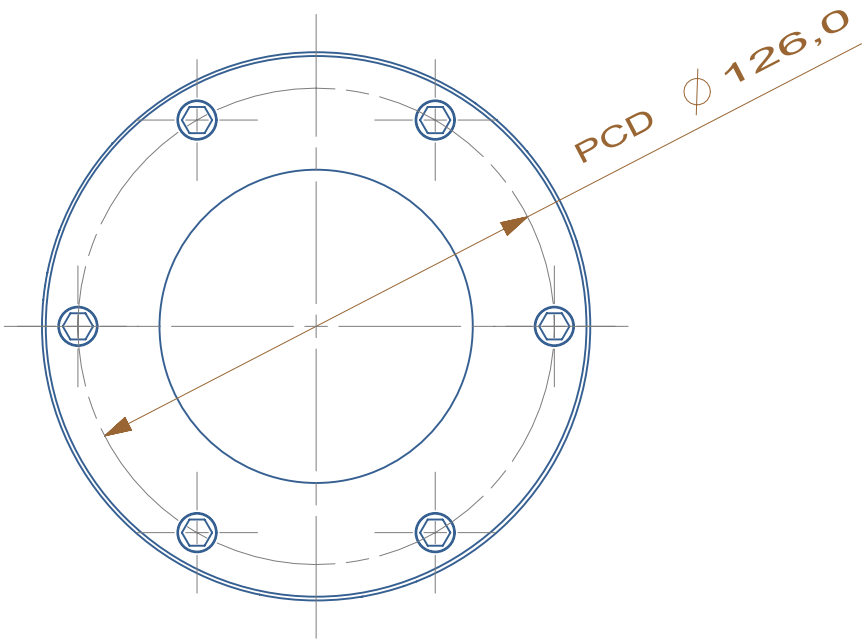
PCD ∅ 126,0

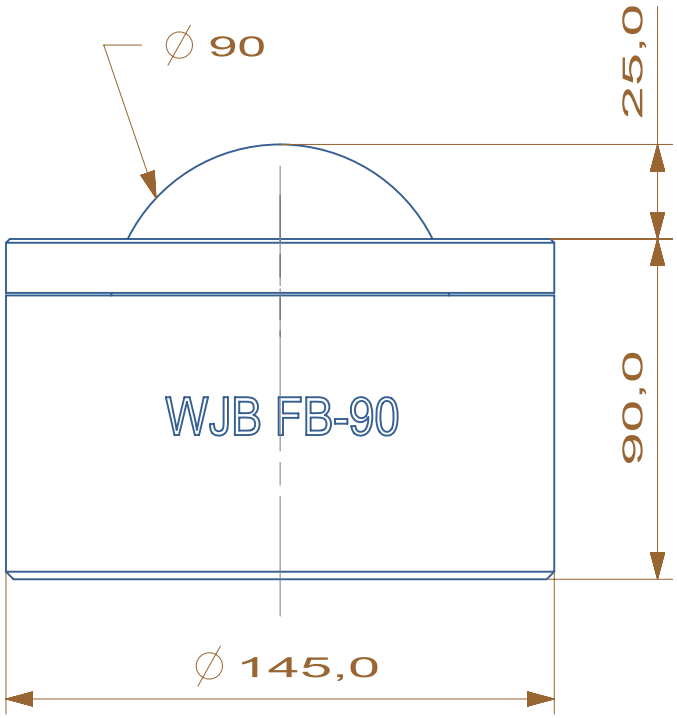
∅ 90
25,0
90,0
WJB FB-90
∅ 145,0